Pirani Vacuum Sensor FG-05A

The UVS ***Model FG-05A series*** Vacuum Pirani Gauge measurement of vacuum covers the range from 0.001 m.Bar to 20 m.bar.

The advantage of this vacuum gauge FLEXA series is the sensor tube has the built in zero and atm adjustments, so that the sensor tube can be used as a transducer, and each sensor is factory calibrated at sensor level.
With This 1:1 Replacement Of Sensor With The Display controller Unit Is Established, And There Is No Dependency On Vacuum Gauge Level Adjustment In Case Of Sensor Replacement.

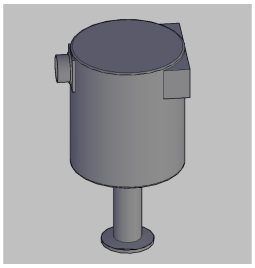

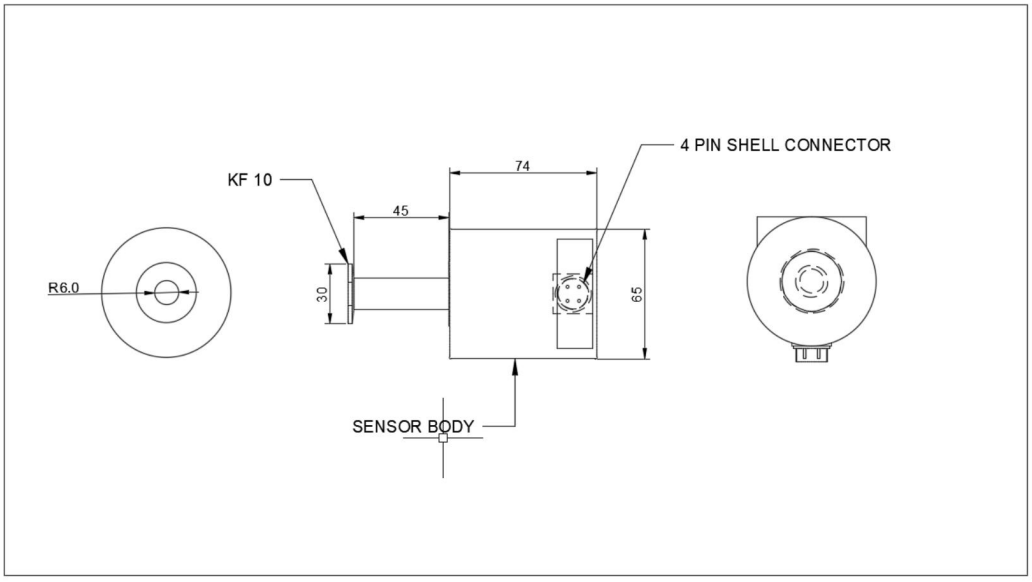

UNIQUE VACUUM SOLUTIONS

Pirani Vacuum Sensor FG-05A

TECHNICAL SPECIFICATIONS :

Vacuum Gauge Head	FG-05A Sensor Tube
Measuring Range	20 Mbar To 0.001mbar.
Temp. Range	+2 To +50 Deg. Celsius
Vac And Atm Adjust	Adjusted By Trim Pot At The Signal Conditioner Pcb Of The Sensor.
Operating Voltage	24V Dc
Mounting	Vertical
Linear Output	1 Volt Per Decade
Sensor Cable Connection	4 Pin Metal Sheel Connector.
Output Voltage	0-10V Dc
Mass	g
Environmental Considerations	Not For Use With Explosive Or Corrosive Gases
Internal Volume	Cc
Accuracy	Typically +/- 15% At <20 Mbar
Maximum Over-Pressure	2 Bar Absolute
Power Consumption	1 W
Output Signal	0 To 10 V d.c. Nominal
Indications	Green Led Status Indicator Shows Normal And Red Led Status Indicator Shows Fault / Fail Condition

Applications: ■ Controlling high vacuum systems ■ Fore vacuum pressure monitoring ■ Safety circuits in vacuum systems ■ General vacuum measurement & control in the fine and rough vacuum range.

Calibration:

Unique Vacuum Solutions ***offers a convenient recalibration service to help users of vacuum measurement pirani/ thermocouple/ full range gauges to maintain all of their vacuum gauges in Certified and peak condition, regardless of the original manufacturer. All makes of vacuum gauges can also be calibrated / repaired if required.***
The calibration certificates are available only on request at additional cost. Pl contact before ordering.

UNIQUE VACUUM SOLUTIONS

#57, 8th cross, 1st B cross, Doddanna industrial area main road, vishwaneedam post, Near Peenya 2nd stage, Bangalore -560091

Ph: 080-28367059, 9886726920. +91-support@uniquevacuum.co.in, *www.uniquevacuum.co.in*